MICROTEK

A3 High-Speed Scanner

S500DC

User's Manual

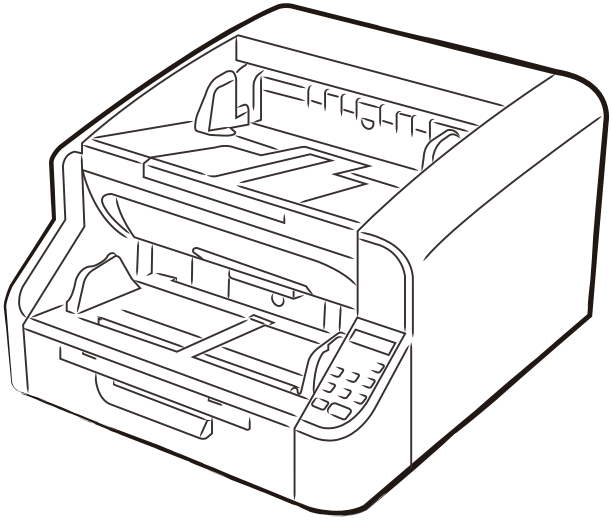

www.microtek.com

Preface

Copyright

© 2024, Microtek International, Inc., all rights reserved. This document may not be reproduced or copied in any way, stored electronically, or translated into any language, without the permission of Microtek International, Inc.

Trademarks

Microtek, FileScan, ScanMaker, ArtixScan, ScanWizard, and DocWizard are trademarks or registered trademarks of Microtek or its affiliates. All other trademarks or registered trademarks are the property of their respective holders. Specifications, software, and hardware bundles are subject to change without notice.

Disclaimer

The contents of this manual have been checked carefully for accuracy, and every effort has been made to ensure that there are no errors. However, Microtek does not guarantee the accuracy of the contents in this manual and reserves the right to make changes to the contents without prior notice. Microtek is not responsible for typographical errors.

Reserved

Please read this manual thoroughly before using the scanner and keep it in a safe place for future reference. Ensure you fully understand the contents of the manual to operate the scanner correctly.

Warning

This scanner may cause radio interference in residential environments while in operation.

I49-005534, A
11/2024

Microtek International, Inc.
No. 6, Industry East Road 3, Hsinchu Science Park, Hsinchu, 30075, Taiwan
Tel: 886-3-5772155, Fax: 886-3-5772598,
https://www.microtek.com

Safety Precautions

Before using your scanner, read the following safety guides carefully, which detail the proper operation of the scanner and its accessories to prevent injuries or damage to users or equipment.

Power Supply:

- Use a power source only with a power rating specified on the marking label.
- Insert the plug completely into the outlet, as a loose connection may cause arcing and result in fire.
- Place and route the power supply cord such that it is not likely to be walked on or pinched by items placed upon or against them, paying particular attention to the cord near the power plugs, convenience receptacles, and at the point where it exits from the outlet.
- When the scanner is left unattended and unused for long periods of time, unplug it from the wall outlet.

Moving and Storing the Scanner:

- Do not place the scanner on any slippery, slanted, or unstable surface. The product may slide or fall, causing serious injury to people as well as serious damage to the product.
- Do not use this scanner near water. Never spill liquid of any kinds on the product, or it may result in electric shock or other hazards.
- This scanner should be situated away from heat sources such as radiators, heat registers, stoves, or other products (including amplifiers) that produce heat.

Using the Scanner:

- The scanner automatically enters sleep mode to conserve power if it is not used for a period of time you set. To wake the scanner and return to Ready mode, press the scanner's Power button for a while.
- When the scanner is near the end of its life, increase the frequency of periodic inspections to ensure safety and reliability.
- For proper disposal, follow local environmental regulations for the classification and disposal of the scanner, its accessories, and packing materials at the end of their lifespans.

Maintenance and Service:

- When the scanner is going to be cleaned, ensure to turn off the power of scanner and unplug the power cable from the AC outlet
- When the scanner needs services, please switch off the scanner power and unplug the power cable of the scanner, then consult a qualified service personnel.
- When replacement parts are required, use replacement parts that are specified by the manufacturer or have the same characteristics as the original parts.
- For safety reasons, inspect the scanner before use and conduct regular inspections at least once a year. (Refer to the ”Care and Cleaning” and ”Maintenance” sections for instructions on inspection methods.)

Symbols Used in This Manual

The following symbols are used in this manual to describe the processes, restrictions, operation precautions and descriptions that should be followed for safety considerations.

Warning

This represents related operations that may cause personal injuries or death if operated improperly. To ensure the safe use of the scanner, please pay special attention to these warnings.

Note

This represents related operations that may cause personal injuries or property losses if operated improperly. To ensure the safe use of the scanner, please pay special attention to these precautions.

Important

This represents operation requirements and restrictions. Please read these items carefully to ensure normal operation of the scanner, and to avoid damaging the scanner.

Prompt

This represents further descriptions of operations, or supplementary explanations for operation processes. It is strongly recommended that you read these annotations.

Table of Contents

Important Safety Instructions 8

Power 8

Installation Location 9

Moving the Scanner 9

Handling 10

Disposal 12

About Your Scanner 12

Features 12

System Requirements 13

Scanner Views 14

Setting Up the Scanner 16

Step 1: Unpacking the Scanner 16

Step 2: Installing the Software 17

Step 3: Connecting the Scanner 18

Basic Operations 19

Turning the Scanner On/Off 19

Document Feeding and Storing 19

Loading a stack of Documents 21

Extending the Tray for Longer Documents 22

Cleaning Paper Jams 23

Scanning Documents 24

Scanner Operation Panel 26

Scanner Operation Modes 27

Accessing Ready Mode 27

Accessing Count Mode 27

Accessing Function Mode 28

Error Messages 29

Care and Cleaning 31
Cleaning the Scanner 31
Cleaning the Sensors, Rollers, and Glass Surfaces 32

Maintenance 34
Replacing the Separation Roller Assembly 35
Replacing the Pickup and Feed Roller Module 36

Troubleshooting 37

Appendix 41
Product Specifications 41
Technical Service 42

Important Safety Instructions

To ensure the safe operation of this scanner, make sure to read the following safety warnings and precautions before using the scanner.

Power

- Connect the scanner only to a power outlet with the correct voltage and frequency.
- Do not use coiled power cables.
- Do not use the scanner without the specified rated voltage power. Doing so will cause fire or electric shock.
- Do not connect other electrical devices to the same power outlet where the scanner is connected. In addition, when connecting with extension cords, make sure the rated current of the extension cord satisfies the current requirements of the scanner.
- If the power cable is frequently stepped on or has heavy objects placed on top of it, it will get damaged. Continue using damaged cables will result in accidents such as fire or electric shock.
- Do not tug on the power cable directly. When disconnecting the power cable, hold on to the plug and remove it from the power outlet.
- Keep other objects clear of the area around the power plug so that the power cable can be easily unplugged in emergencies.
- If there is anything that you are unclear about concerning the power, please contact your local authorized dealer or the customer service center to learn more information.

Installation Location

The performance of this scanner will be affected by its installation environment. Make sure the installation location of the scanner complies with the following environmental requirements:

- Keep sufficient space around the scanner for operation, maintenance and ventilation use.
- Avoid installing the scanner under direct sunlight exposure. If this is unavoidable, the scanner should be covered with curtains.
- Avoid installing at locations where large amounts of dust accumulate.

- Avoid warm or humid locations, such as close to water faucets, heaters or humidifiers; also avoid locations that emit strong fumes such as ammonia, paint thinners or other volatile chemicals.
- Avoid installing in locations with vibrations.
- Avoid exposing the scanner to locations with rapid temperature changes. If the room where the scanner is installed is colder, but the temperature rises rapidly, water drops (condensation) may form inside the scanner. This will cause the scanning quality to drop significantly.

  The following conditions are recommended for getting the best scanning qualities:

  Room temperature: 0 °C to 40 °C

  Humidity: 20% to 85% (relative humidity)
- Avoid installing the scanner next to devices that generate magnetic fields (such as speakers, television or radios).

Moving the Scanner

- Pay extra attention when moving the scanner. For safety, always have two people lift or move the scanner, with each person supporting one end. Never attempt to lift the scanner alone, as this could result in the scanner dropping or causing serious hand injuries.
- Make sure to unplug the interface cable and power cable when moving the scanner. If these objects are still connected when moving the scanner, the power plug or connector may get damaged, or may result in the scanner dropping and causing injuries.

Handling

Warning

Be aware of the following items whenever using the scanner. If you don't do so, it may result in fire or electric shock.

- Do not use alcohol, benzene, paint thinners, aerosol sprays or any other highly flammable substances near the scanner.
- Do not cut, damage or modify the power cable. Do not place heavy objects on the power cable and do not tug or bend the power cable excessively.
- Do not connect the power cable with wet hands.
- Do not connect the scanner to a multi-outlet power strip.

- Do not tie the power cable into knots or twist it, as doing so will cause fire or electric shock. When connecting the power cable, make sure to fully insert the power plug firmly into the power outlet.
- When using coiled extension cords, please unwind all the power cables from the coil. Using power cables wound on the coil for extended periods of time may cause the power cable to overheat and result in fire.
- Do not use power cables other than the one included with this scanner.
- Do not disassemble the scanner or modify it in any way because this is extremely dangerous and will cause fire or electric shock.
- Do not use flammable aerosol sprays near this scanner.
- Switch off the power switch and unplug the power plug from the power outlet when cleaning this scanner.
- Use a slightly damp, well-wrung cloth to clean the scanner. Do not use alcohol, benzene, paint thinners or any other flammable substances.
- When using the scanner, if the scanner emits abnormal noise or smoke, heat or odor, or if the scanner cannot operate normally or have other abnormalities, switch off the power switch immediately and unplug the power plug from the power outlet. Then contact your local authorized dealer or the customer service center to learn more information.
- Do not drop the scanner or let it get impacted or have strong vibrations. Whenever the scanner is damaged, you should switch off its power switch immediately and unplug its power plug from the power outlet. Then, contact your local authorized dealer or customer service center to maintain the scanner.
- Before moving the scanner, make sure to switch off its power switch and unplug its power plug from the power outlet.

Note

- Do not install the scanner on unsteady or inclined surfaces, or in areas with severe vibrations, as doing so will cause the scanner to drop and cause personal injuries or damage the scanner.
- Do not block the ventilation openings. Otherwise, the scanner may overheat and there will be the danger of fire.
- Do not place small metal objects such as staples, paper clips or jewelry on the scanner. These objects may fall into the scanner and cause fire or electric shock. Whenever such items fall into the scanner, you should switch off its power switch immediately and unplug its power plug from the power outlet. Then, contact your local authorized dealer or customer service center to maintain the scanner.
- Do not place the scanner in humid or dusty locations. Doing so will cause fire or electric shock.

- Do not place objects on top of the scanner. Such objects may overturn or drop, causing personal injuries.
- Hold onto the power plug firmly when unplugging the power cable. Do not tug on the power cable directly as doing so may damage or expose the wires inside the power cable, causing fire or electric shock.
- Sufficient space should be kept around the power plug so that it can be easily unplugged. If objects are stacked around the power plug, it cannot be unplugged in emergencies.
- Do not spray water or flammable substances (alcohol, paint thinners and benzene, etc.) into the scanner, as doing so may cause fire or electric shock.
- When the scanner is not used for long periods of time (such as overnight), its power switch should be switched off to ensure safety. Also, when the scanner is not used for a duration such as consecutive holidays, its power switch should be switched off and its power plug should be unplugged from the power outlet to ensure safety.
- Do not wear loose clothing or wear jewelry when using the scanner (they might get pulled into the scanner). This will result in personal injury. In particular, pay extra attention to necklaces and long hair. If any object is pulled into the scanner, disconnect the power cable immediately to stop the scanner from operating.
- Please operate carefully when loading paper and clearing paper jams from the scanner. The edges of paper may cut your hand.



CAUTION: Hot surface

- Parts with labels may heat up, which may cause scalding if not operated carefully. To ensure safe operation, make sure to follow all safety precautions.

Disposal

- When disposing the scanner, make sure to follow related local laws and regulations, or consult the dealer who sold you the scanner

About Your Scanner

The S500DC is an A3 scanner designed for high-performance document processing, making it perfect for large-scale digitization tasks. Capable of handling up to 500 sheets of A4 paper at a time, it delivers precise, clear scans with an optical resolution of 600 dpi. With a USB connection for fast data transfer and a scanning speed of 130 ppm/260 ipm, it significantly boosts productivity. Whether it's everyday documents or extra-long sheets, the S500DC handles it all with ease, making it an all-in-one solution for businesses or organizations focused on digitization and document management.

Features

- Production-grade A3 High-Speed Scanning: Combines large format and high-speed scanning for 24-hour continuous operation, designed for busy, high-volume environments.
- High-Speed Scanning: Achieve scan speeds of up to 130 pages per minute (ppm)/260 images per minute (ipm) in color, grayscale, or black-and-white, with consistent performance at a resolution of 300 dpi in speed priority mode.
- High-Capacity Feeder: The scanner's high-capacity paper feeder holds up to 500 sheets of paper, allowing for unattended, high-volume scanning. This saves time and effort, especially when scanning large volumes.
- Adjustable Tray Position: The tray height offers three settings - high, medium and low—allowing for adjustments based on the amount of paper. This feature reduces the wait time for the feed tray to raise when scanning single sheet or small sheets of paper, making the scanning process more efficient.
- Adaptive Paper Separation Technology: Equipped with advanced paper separation technology that adjusts separation strength according to different paper types and thicknesses, ensuring smooth feeding without paper jams.
- Page Count: Allows you to count pages without connecting to a computer, eliminating manual counting errors and reducing hassle.
- Intuitive Control Panel: Allows configuration of the scanner's hardware features without the need for additional software. Ease of use greatly enhances the user experience.
- Ultrasonic Double-Feed Detection: Prevents multiple pages from being fed at the same time, ensuring no documents are lost or missed.
- Skew Detection: Alerts and stops scanning if paper is too excessively skewed, preventing damage to documents.
- Binding Detection: Stops the feeding of documents with staples or tape to prevent potential damage.

- Folded Corner Detection: Alerts and stops scanning when folded corners are detected, preventing important information from being obscured.
- Mixed Size Scanning with Uniform Output Size: Lets you select a paper size that accommodates the dimensions of the document being scanned, eliminating incomplete scans.
- Power-Saving Settings: Offers an adjustable sleep mode function that helps reduce energy consumption.
- Quiet and Stable Operation: Operates quietly and stably, ensuring that the output paper is neatly stacked for easy organization.
- Scanner Management: Allows administrators to view scanner logs, check usage and status, and clear cache or roll counts.
- Microtek DocWizard EX Software: DocWizard EX is an advanced document scanning software that offers a range of powerful features, including automatic document orientation, paper size detection, automatic cropping, black border removal, background removal and filling, automatic color detection, and bleed-through prevention. It also supports multi-stream output, blank page skipping, image splitting, and book page sorting. These features significantly increase document processing efficiency, making the digitization of large volumes of documents faster and more accurate.

System Requirements

- Color display with 24-bit color output capability
- 4GB of RAM or more
- Intel Core i3, 3.0 GHz Dual-Core processor or higher PC with built-in USB port
- Microsoft Windows 7/ 8 10/ 11

Scanner Views

Front/Top View

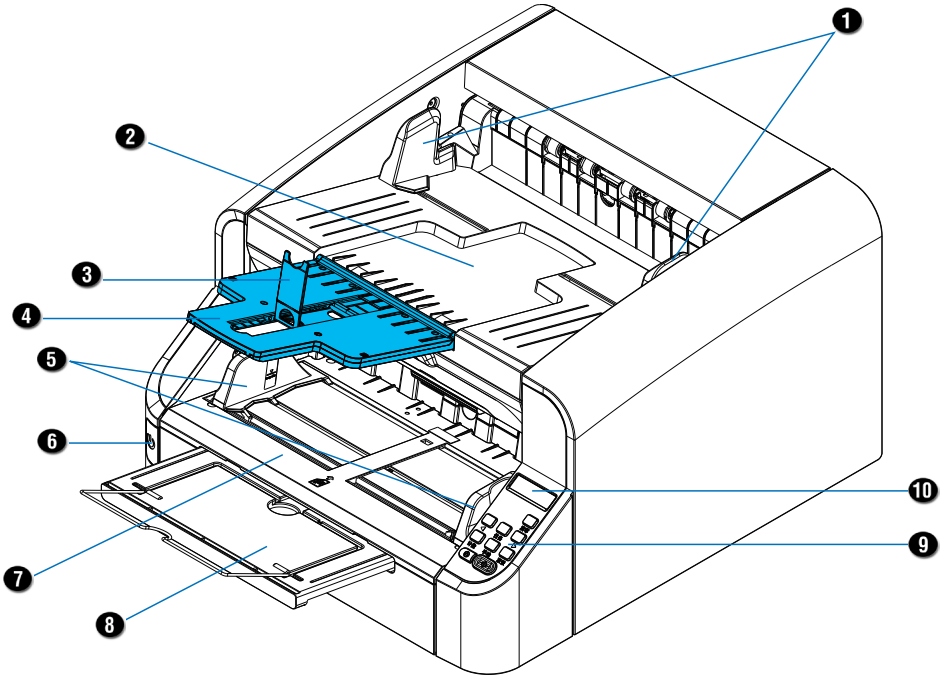

No.	Part	Function
1	Guide Arms (left/right)	Adjusts the position of documents to suitable positions.
2	Document Output Tray	Holds the output documents.
3	Paper Stopper (1)	Prevents the stack of output documents from sliding off.
4	Output Tray Extender	Extends the length of the paper output tray.
5	Guide Arms (left/right)	Adjusts the position of documents to suitable positions.
6	Power button	Controls the scanner's on/off.
7	Document Feed Tray	Holds the documents to be scanned.
8	Feed Tray Extender	Extends the length of the paper feed tray.
9	Control panel	Contains nine buttons and an LCD panel, used to configure scanner settings directly.
10	LCD panel	Displays information related to current operations and any error messages.

Left/Rear View

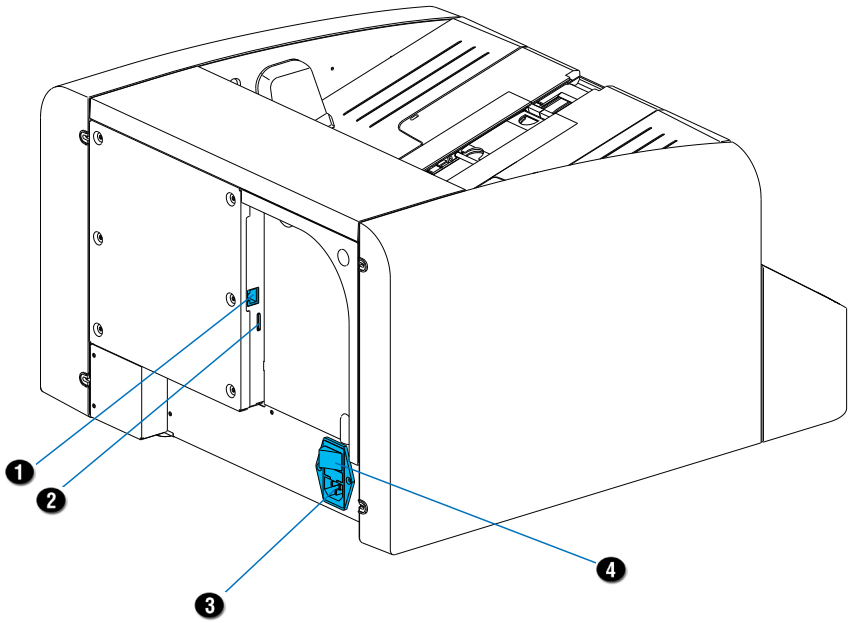

No.	Part	Function
1	USB Type-B port	Connects the USB cable to the computer.
2	USB Type-C port	For manufacturer debugging use only.
3	Power connector	Connects the scanner to the power adapter.
4	Power switch (I/O)	Controls the scanner's power supply.

Setting Up the Scanner

This section guides you through the process of setting up the scanner and provides details on connecting it to your computer. Before setting up the scanner, please take note of the following precautions:

- Ensure you use the power adapter and USB cable provided with the scanner.
- Do not place the scanner on any slippery, slanted, or unstable surfaces to prevent it from sliding or falling, which could cause injury and damage the scanner.
- Keep all packing materials, including the original carton, in case you need to transport the scanner in the future.

Step 1: Unpacking the Scanner

Open the scanner package and check the main components listed below to ensure you have received all the items required for installing the scanner. If any items are damaged or missing, please contact your product dealer or Microtek customer service center.

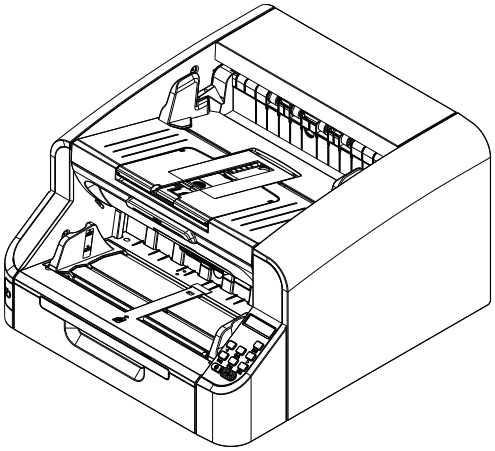

Scanner

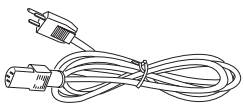

Power cord



USB cable



Step 2: Installing the Software

Please follow the steps below to load and install the required software for the scanner:

1. Visit the Microtek website at www.microtek.com.
2. Use the search function to find the product “S500DC” and navigate to the “Downloads” page associated with this product.
3. Download the necessary drivers and software marked as “Yes” on the download list, based on your operating system.
4. Once the download is finished, double-click the downloaded file (*.exe) to begin the installation process.
5. After installing all the required drivers and software, restart your computer.

NOTE: The file download process may take some time. The duration may vary based on your internet speed, bandwidth, file size, and other factors. Please be patient during the download. If you encounter any issues or need further assistance, please contact Microtek customer service center.

Step 3: Connecting the Scanner

1. Plug one end of the power cord into the scanner's power connector, and the other end into a wall outlet or another power source.
2. Connect one end of the USB cable to your computer's USB port, and the other end to the USB Type-B port on the scanner.
3. Switch the “I/O” button located on the left side at the back of the scanner to the “I” position to supply power to the scanner.

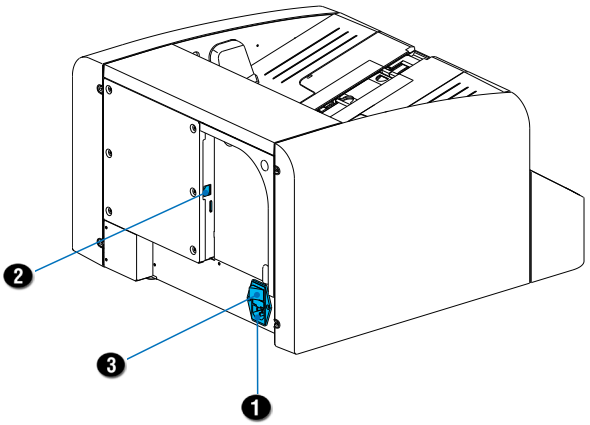

4. Press and hold the Power button (⏻) on left side of the scanner's front panel for about 3 seconds until the LCD screen activates.

   Once the LCD screen lights up, it will display the ”MICROTEK” logo, followed by ”Ready”, indicating that the scanner is detected by your system and is ready for use.

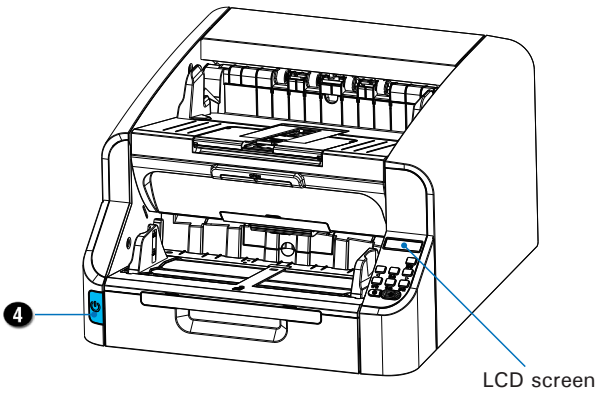

Basic Operations

This section offers instructions for properly loading documents into the scanner and also includes guidance on clearing paper jams, enabling a smooth and uninterrupted scanning process while protecting your documents from potential damage.

Turning the Scanner On/Off

To turn on the scanner:

Switch the “I/O” button to the “I” position to supply power to the scanner, then press and hold the Power button (⏻) for about 3 seconds until the LCD screen activates, indicating that the scanner is turned on.

To turn off the scanner:

Press and hold the Power button (⏻) until the LCD screen turns off, indicating that the scanner is turned off. You can either leave the scanner in this state or switch the “I/O” button to the “O” position to fully power it off.

Document Feeding and Storing

Document sizes that the scanner can scan range from business cards, and checks to A3 format. For the sizes and thicknesses of documents that can be fed into the scanner, please visit the official website of Microtek.

Important

The documents must meet the following standards in order to be scanned:

- When scanning multi-page documents, these pages must be grouped so that the sizes, thicknesses and weights of the papers in each group are the same. Scanning several different types of paper at once may cause the high-speed scanner to have paper jams.
- Make sure the ink on the documents has dried before scanning. Scanning documents with undried ink may stain the roller or scanning glass, causing images to have lines or stains on images or stain other documents.
- Make sure to clean the roller or scanning glass after scanning documents written with a pencil. Scanning documents written with a pencil may make the roller or scanning glass dirty, causing images to have lines or stain other documents.

- Please note that scanning the following types of documents may cause paper jams or malfunctions. To scan these types of documents, you can copy the documents first and then scan the copies.


Wrinkled or creased documents


Curly documents


Torn documents


Documents with paper clips or staples


Documents with excessive dust or paper scraps


Carbon paper


Surface-treated paper


Paper that is extremely thin and translucent

Recommended Capacity of the Document Feed Tray:
New premium paper (70 g/m²) can hold a maximum of 500 pages or a stack height of up to 48 mm.



Important

When loading a stack of documents into the feed tray, ensure that the stack does not exceed the maximum height indicated by the marks on the two Guide Arms. Exceeding this limit may cause paper jams during scanning.

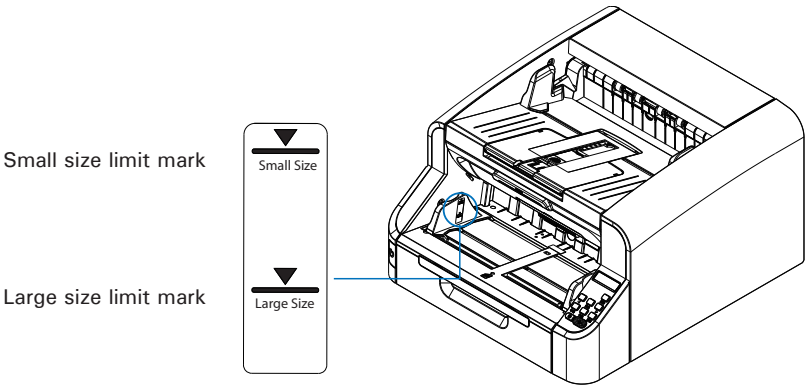

Loading a Stack of Documents

1. Fan out the stack of documents to separate the pages, then align the top edges neatly before loading them into the feed tray.

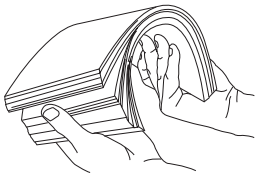

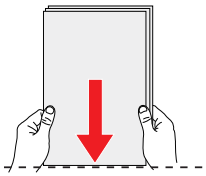

2. Load the stack into the feed tray with the side to be scanned facing up and the top end oriented toward the inside of the scanner.

3. Push the stack into the feeder until the edges touch the end of the tray.

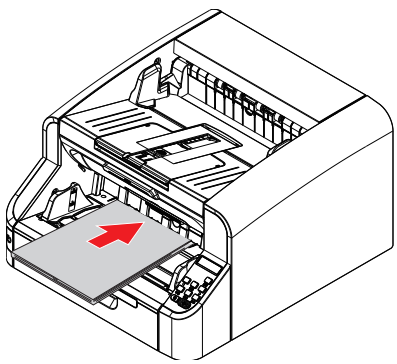

4. If necessary, adjust the stack of document by sliding the two Guide Arms toward the edges of the stack to ensure it is centered in the tray.

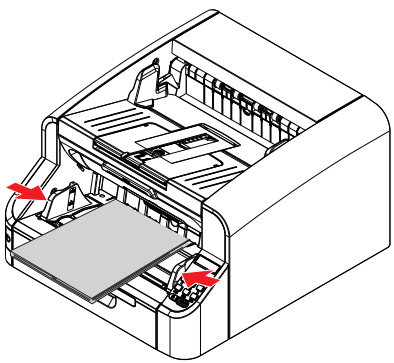

Extending the Tray for Longer Documents

To accommodate longer documents or ensure output documents remain neatly stacked in the tray, extend the feed tray and output tray as needed:

Extending the Feed Tray

Pull out the Feed Tray Extender until it locks into place to support longer documents when loaded.

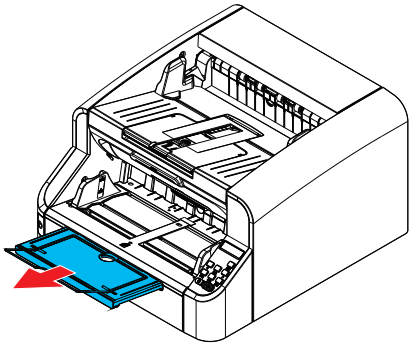

Using the Paper Stopper

Flip up the Paper Stopper to keep the output documents neatly stacked in the tray.

If needed, slide the Paper Stopper along the slots to your desired position for the length of the document.

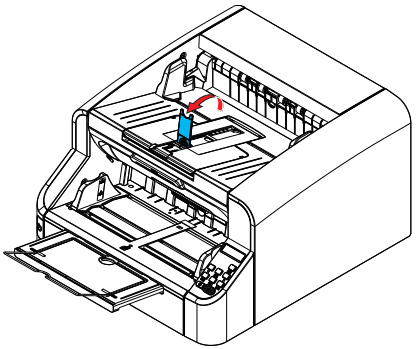

Extending the Output Tray

Flip up the Output Tray Extender until it is fully open and lies flat to support longer documents as they exit from the output slot.

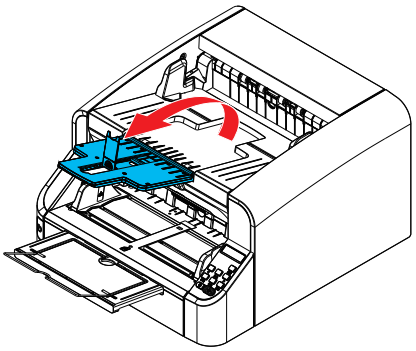

Cleaning Paper Jams

When a paper jam occurs during scanning, the scanning task will stop immediately. Remove the jammed paper and ensure the remaining papers are correctly positioned before restarting the scan.

Paper Jammed at the Output Slot

Gently pull the jammed paper out from the output slot in the direction shown in the picture.

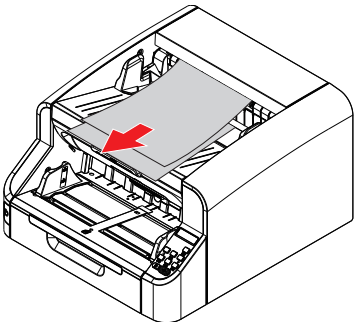

Paper Jammed Inside the Scanner

1. Place your hand under the release handle and press upward in the direction shown in the picture to open the scanner.

   When opening, you will hear three beeps and the LCD screen will display the message "Cover Opened".

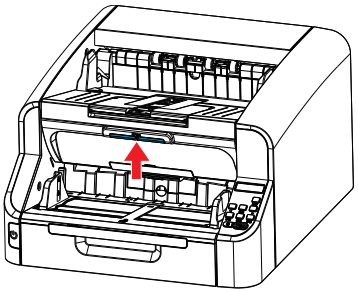

2. Lift the upper unit of the scanner to an appropriate position where it remains securely open.
3. Remove any jammed paper from the feed path.
4. Lower the upper unit back until it clicks into place.

   At this point, the LCD screen will display "Ready" message to indicate that the scanner is prepared for use.

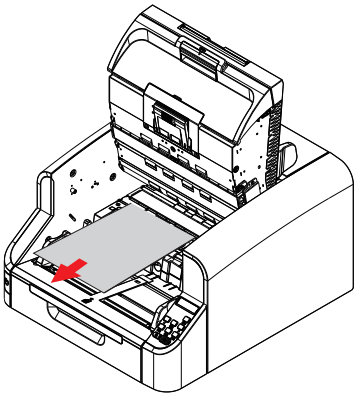

NOTE:

- *Be careful not to trap your hands or fingers when lifting or lowering the upper unit of the scanner.*
- *Do not forcefully remove jammed paper from the feed tray while the upper unit is closed. Doing so may damage the rollers and result in improper scanner functionality.*

Scanning Documents

This section provides basic information for capturing images from your scanner using DocWizard EX scanning software on Windows.

NOTE: Before scanning the document, make sure that the scanner is in the "Ready" mode.

1. **Load Documents.**

   Load the documents to be scanned into the feed tray, as described in the "Loading a Stack of Documents" section of the manual.

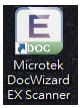

2. **Launch Software.**

   Launch "**Microtek DocWizard EX**" software by double-clicking its program icon on the desktop.

3. **Select Scanner.**

   In the software, go to "**Scan > Select device source**". Select scanner driver "**Microtek A3FZ Scanner**" from the window that appears, and then click OK.

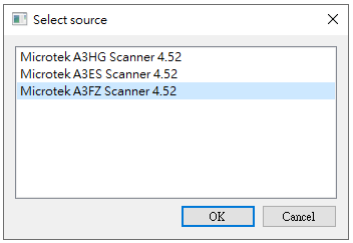

   Once the scanner is found, the status bar will show the message "Device Microtek A3FZ Scanner is open", indicating that the scanner is prepared for scanning.

4. **Configure Scanning Settings.**

   Select "Scan > Scan settings" to open the Scan settings interface (TWAIN interface). Specify scan settings as required for your scan job, and click "OK" to confirm.

   For details on how to configure the scan settings, refer to the online help manual by clicking on the "Help" button in the interface.

5. **Start Scanning.**

   Click "**Scan > Scan"** to start scanning. First, the scanner automatically adjusts the feed tray to the specified height, and then process with scanning based on the scan settings configured in the Scan Settings interface. After scanning is complete, the scanned images will be automatically saved to the system's default folder and displayed as thumbnails in the Thumbnail and Preview areas for viewing.

6. **Save Scanned Images.**

   Select "**File > Export...**" to specify the file properties and storage location. Choose "All pages" from the Page Range options, and click "Save". All scanned images will be saved in the designated folder with the file properties you defined in the Export dialog box.

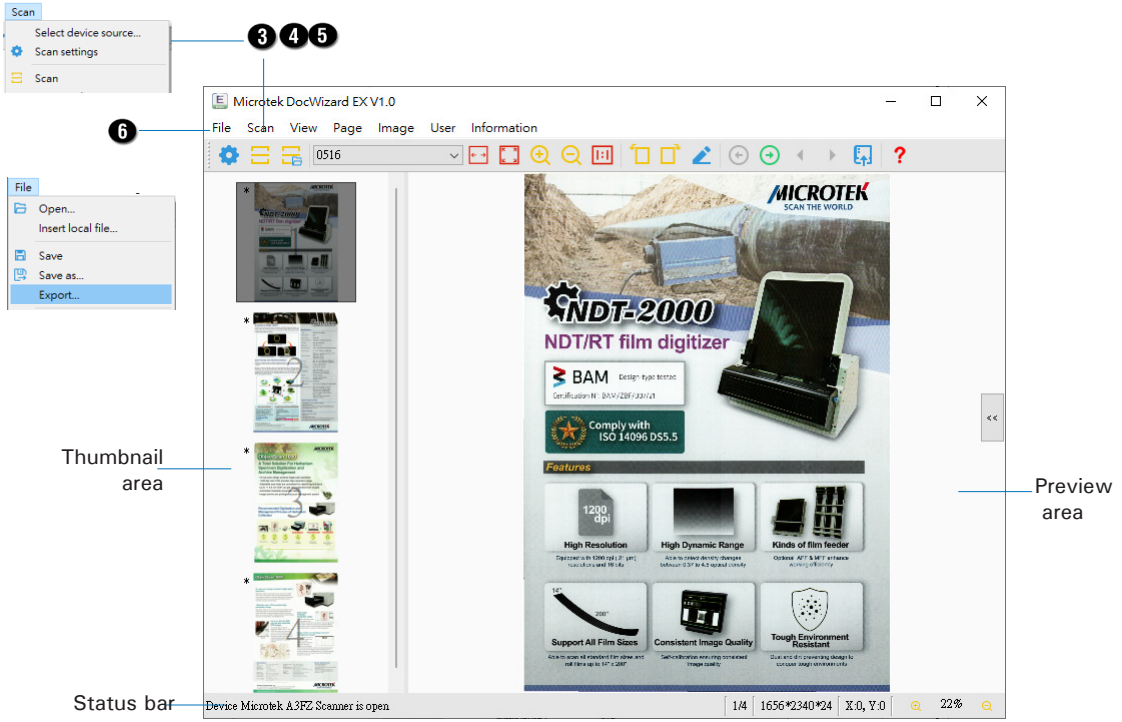

DocWizard EX Main Interface

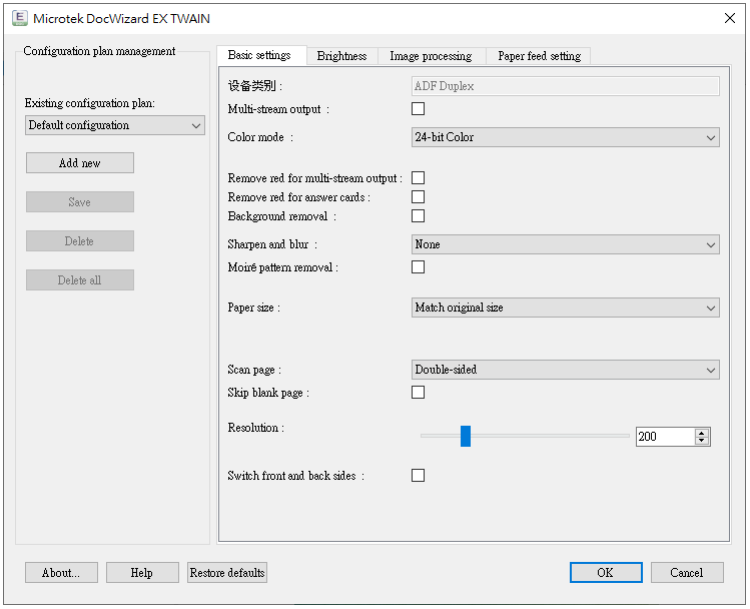

Scan Settings Interface (TWAIN Interface)

Scanner Operation Panel

The scanner operation panel is located on the front right side of the scanner, includes nine physical buttons and an LCD screen. Through this panel, you can directly configure the settings for scanner's hardware functions without having to connect to a computer. These functions include counting pages, checking scan and roller counts, setting the idle time before sleep mode activates, and more, providing you with a convenient and practical hardware interface.

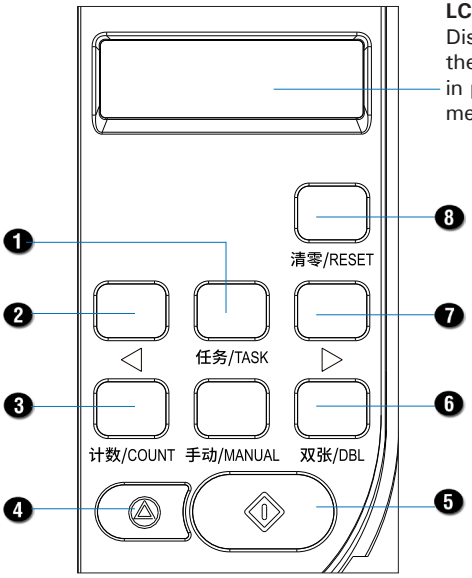

LCD screen:
Displays information relevant to the current operation mode or task in progress, as well as any error messages that may occur.

No.	Button	Function
1	TASK	Press to enter Function mode from Ready mode. It also serves as a confirmation button for a selection.
2	PREV (◁)	Press to go back to the previous option.
3	COUNT	Press to enter Count mode; press again to return to Ready mode.
4	STOP	Press to pause an ongoing page counting or scanning operation.
5	START	Press to begin the page counting process.
6	DBL	Press to enable/disable the scanner's ultrasonic double sheet detection function.
7	NEXT (▷)	Press to move to the next option.
8	RESET	Press to reset the page or scan count to zero.

Scanner Operation Modes

The scanner operates in three main modes: Ready, Count, and Function. For detailed instructions on how to access and use each mode, please refer to the information provided below.



Accessing Ready Mode

Once the Power button (⏻) is pressed to activate the scanner, the Ready mode is automatically engaged. Additionally, the Ready mode can be accessed from either Function mode or Count mode by pressing the TASK or COUNT button.

In Ready Mode, the scanner is prepared for image capture and ready to wok with scanning software. Follow these steps to operate:

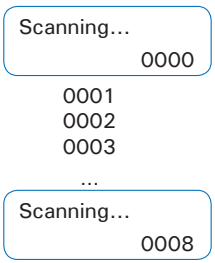

1. Launch the DocWizard EX scanning software.
2. Refer to the "Scanning Documents" section of the manual for detailed scanning instructions. During the scan, the LCD screen will display the current scan count.
3. When finished, the LCD screen will display the total number of scans processed.
4. Press the RESET button to clear the scan count and reset to zero. Or, you may add to current scan count with a new stack.

Accessing Count Mode

Count mode allows the scanner to operate as an independent page counter, tracking the number of pages without using scanning software. Follow these steps to use Count mode:

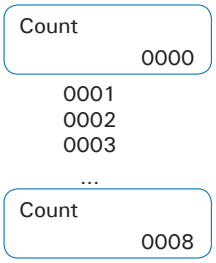

1. Press the COUNT button to enter Count mode, where the count will start at 0000.
2. Load a stack of documents into the feed tray.
3. Press the START button to start counting pages. The LCD screen will update the count with each page fed.

   To pause the counting, press the STOP button. To resume, press the START button again.
4. When finished, the LCD screen will display the total number of pages processed.
5. Press the RESET button to clear the count and reset to zero. Or, press the START button to add to the current count with a new stack.

CLN Paper Path

Accessing Function Mode

Function mode is designed for configuring the scanner's various functions, enabling you to set hardware parameters directly without using scanning software. Follow the these steps to operate:

1. Press the TASK button to enter Function mode. The LCD screen will initially display "CLN Paper Path".
2. Press the PREV/NEXT button to browse the available functions. Once you find the desired function, press the TASK button to select.
3. Use the PREV/NEXT button to browse the selectable setting options for that function, then press the TASK button to confirm your choice.
4. When finished, press the PREV/NEXT button to locate "Return", then press the TASK button to exit Function mode and return to Ready mode.

The following table describes functions that can be adjusted in the Function mode, listed in the order they appear.

Function	Description
CLN Paper Path	Activates the internal rollers to clear any residual paper from the paper path.
Separation Mode	Sets the paper separation strength with three level settings: High, Mid (default), and Weak, to manage the paper pickup effectively.
Sleep Mode	Sets the scanner idle time to enter sleep mode. Available options include 5M, 10M, 20M, 30M, 1H, 2H, 4H, and Never.
Tray Position	Offers three height settings - High, Mid, and Low (default) - based on the amount of paper, reducing the wait time for the feed tray to raise when scanning single or small sheets of paper.
Query	Displays the total number of pages processed by the feeder, including Roller Count, History Count, and Reset Count.
Language	Selects the display language for the LCD screen from English, Traditional Chinese, and Simplified Chinese.
Power Off	Turns the scanner off immediately.
Return	Exits Function mode and returns the scanner to Ready mode.

Error Messages

If any of the following messages appear on the LCD screen, it indicates that the scanner has encountered an issue during scanning. Please follow the suggested solution to resolve the problem.

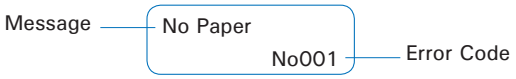

---

1. Message: **No Paper**
Error Code: No001
Problem: There is no paper in the feed tray.
Solution: Add paper to the scanner's feed tray.

---

2. Message: **Paper Jam**
Error Code: Pa001, Pa101, Pa102, Pa103
Problem: Paper is jammed inside the scanner.
Solution: Open the upper unit of the scanner and remove the jammed paper.

---

3. Message: **DBL Feed**
Error Code: Db001
Problem: The scanner picks up two or more sheets of paper simultaneously.
Solution: Remove any jammed papers from the output slot and fan the papers before loading them back into the feed tray. Or, reset the paper separation strength.

---

4. Message: **Cover Opened**
Error Code: Co001
Problem: The upper unit of the scanner is not fully closed and properly seated.
Solution: Lower the upper unit back until it clicks into place.

---

5. Message: **Feed Error**
Error Code: Pf001
Problem: The scanner failed to pick up the paper.
Solution: Rearrange the paper and try scanning again. If the issue persists, check the wear condition of the pickup rollers and replace them if necessary.

---

6. Message: **Staples Detected**
Error Code: St001
Problem: The scanner detected stapled paper in the feed.
Solution: Open the upper unit of the scanner and remove the paper with staples from the feed path. After removing the staples, reload the paper.

7. Message: **Size Error**
Error Code: Cc001
Problem: The selected Paper size does not match the actual paper size being scanned after enabling the Size detection feature.

Solution: Disable the “Size detection” feature, or select a size that matches the actual paper being scanned.

---

8. Message: **Folded Corner**
Error Code: Zj001
Problem: The scanner has detected a folded corner on the paper after enabling the Folded corner feature.

Solution: Disable the ”Folded corner detection” feature, or manually straighten the folded corners of the paper before scanning again.

---

9. Message: **Skew (or Paper Skew)**
Error Code: Sk001
Problem: The paper is skewed when fed into the scanner.

Solution: Open the upper unit of the scanner and remove the skewed paper. Reorganize the paper, then reload it into the feed tray, ensuring it is centered by adjusting the Guide Arms to fit snugly against the edges of the paper.

---

10. Message: **Image Capture Error**
Error Code: Gp001
Problem: Timeout for picture capture.

Solution:
a) Check if the USB cable is securely connected to both the computer and the scanner.
b) Close unnecessary programs running on your computer.
c) Upgrade your computer to meet the following specifications at least:
   - Intel Core i3, Dual-core processor at 3.0 GHz
   - 4 GB RAM
   - Windows 64-bit
d) Reduce the number of sheets loaded into the feed tray.

---

11. Message: **USB Disconnected**
Problem: USB connection interrupted

Solution: Make sure the USB cable is securely connected to both the computer and scanner.

Care and Cleaning

To maintain the scan quality, please clean the scanner regularly by following the descriptions below

Note

- Do not clean the scanner with spray cleaners. Otherwise, it may wet this delicate machine and cause it to malfunction.
- Cleaning the scanner with paint thinners, alcohol or other organic solvents is strictly prohibited. These types of solvents may cause the exterior of the scanner to deform or discolor, and cause other damages.
- Please operate carefully when opening the closing the upper unit of the scanner to avoid crushing your hand.

Cleaning the Scanner

About the cleaning cloth

Please use cleaning cloths that will not damage the scanner to avoid scratching the internal components.

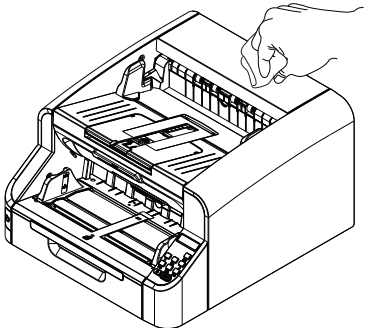

Cleaning the exterior of the scanner

To clean the exterior of the scanner, please use a cloth dampened with water or neutral detergents. Wipe with a wrung cloth, then wipe the scanner dry with a clean dry cloth.

Cleaning the document feeder and transport path

Dust or debris in the document feeder or inside the scanner may cause scanned images to have spots. Clean the dust and debris on the feeder and inside the scanner regularly with compressed air (e.g., dust blower).

After completing larger scanning operations, switch off the scanner and clean all the debris.

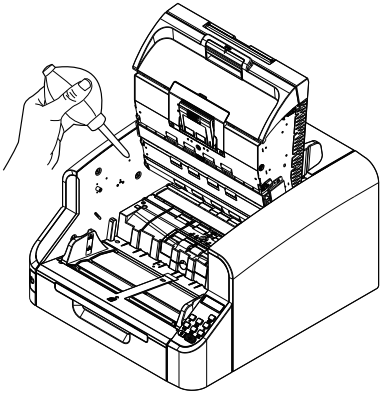

Cleaning the Sensors, Rollers, and Glass Surfaces

To ensure optimal performance from your scanner, it is important to regularly clean several critical components of the scanner, including sensors, rollers, and glass surfaces.

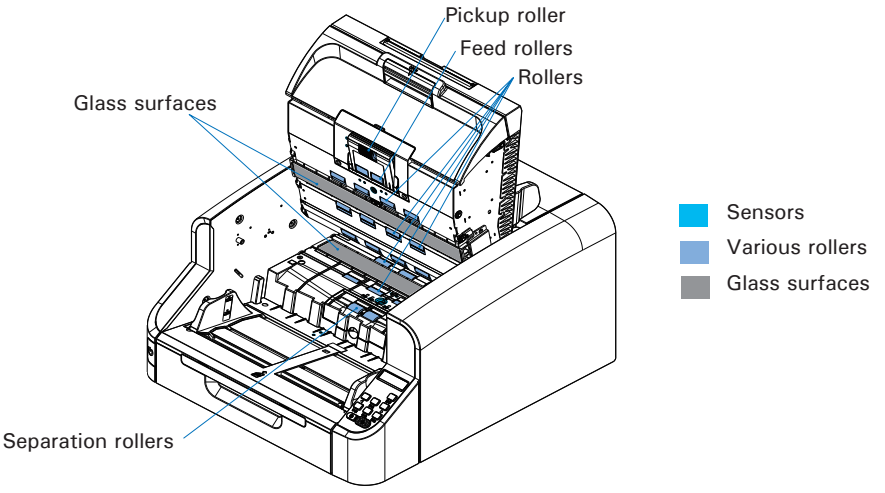

Cleaning the Sensors

The dust and debris gathered on the sensors will cause documents to be identified incorrectly. Clean the sensor regularly using a dust blower so that dust and debris will not gather on the sensors.

Upper inside of the scanner

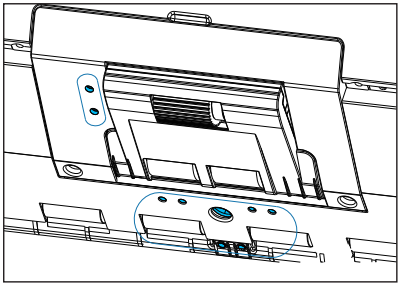

Lower inside of the scanner

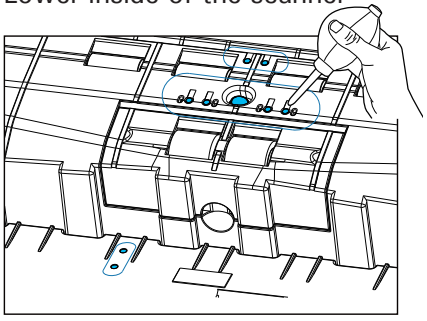

Cleaning the Rollers

After the scanner has been used for a period of time, large amounts of dust and debris will accumulate on the surface of the rollers (e.g., pickup rollers, feed rollers, separation rollers, etc); wipe off the debris and dust on their surfaces with a cloth that was soaked in water and wrung.

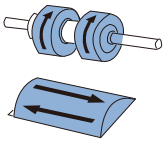

Direction for wiping the rollers

Cleaning the Glass Surfaces

After the scanner has been used for a period of time, smudges from documents may attach to the glass surface of the scan head, causing documents to have vertical lines. Please wipe off the smudges on the glass surface gently with a clean cloth.

Maintenance

Over time, the rollers in your scanner may wear out, leading to issues such as paper jams and feed errors. To resolve these problems, inspect the rollers and replace them if necessary.

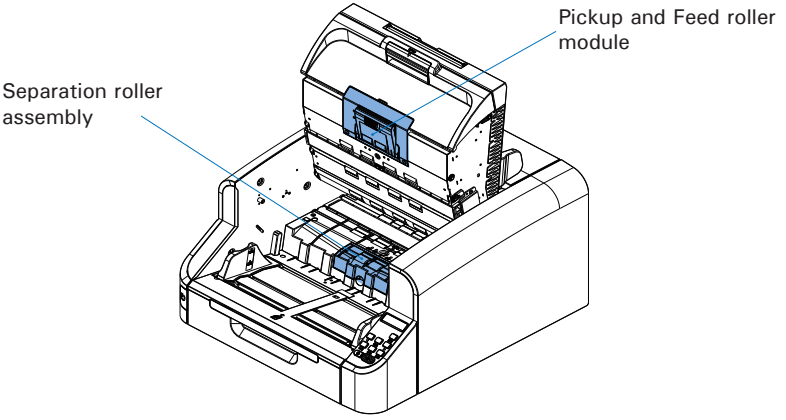

Roller Replacement Cycle

Rollers are consumable and should be replaced after feeding approximately 450,000 pages ("450,000" pages are based on the number of high-quality offset paper scanned. Depending on the type of paper and other factors, the actual life of the rollers may be shorter) and the number of sheets scanned can be checked in the user program.

When the pages fed by the roller exceed 450,000 pages, after switching on the scanner and scanning is performed using scanning software, a replace roller prompt will appear on the computer screen.

Important

- After the replace roller prompt appears, please purchase a replacement roller kit and replace the roller by following the related steps in the removal and reinstallation steps.
- When the roller shows signs of wear, the chance of paper jam and paper feed errors occurring will increase. If this type of situation occurs, please replace the roller regardless of the page count.
- Make sure to reset the roller count after replacing the roller.

Replacement Roller Kit

The replacement roller kit includes both the Pickup and Feed roller module, as well as the Separation roller assembly. Contact your local authorized dealer or Microtek customer service center to purchase a new one for replacement.

Replacing the Separation Roller Assembly

1. With the upper part of the scanner open, locate the Separation roller assembly inside at the bottom.
2. Remove the roller cover of the Separation roller assembly.
   a) Place your finger at the position shown in the picture, then pull the roller cover upward firmly to open it.
   b) Remove the roller cover from its position.

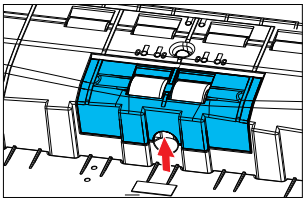
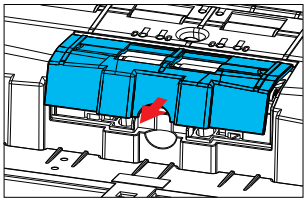

3. Remove the Separation roller assembly.
   a) Pull the lock lever **up** on the shaft to release and loosen the roller assembly.

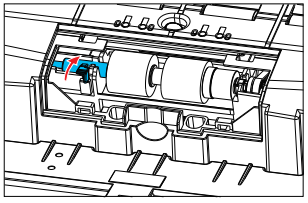
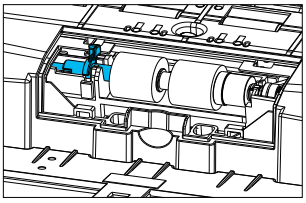

   b) Hold the lock lever and slide the shaft to the left horizontally, then take the roller assembly out carefully from its compartment.

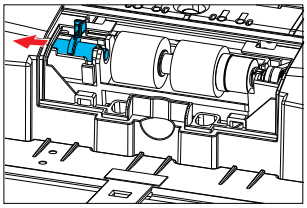
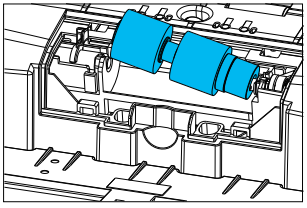

4. Insert the new roller assembly into its compartment, then reverse the disassembly steps to install it in place. After done, place the roller cover back until it clicks into place.

Note

Please ensure that you fully understand the content of this instruction before proceeding with the roller replacement.

Replacing the Pickup and Feed Roller Module

1. With the upper unit of the scanner open, locate the Pickup and Feed roller module inside at the top.
2. Open the roller cover of the Pickup and Feed roller module.
   a) Place your finger at the position shown in the picture.
   b) Pull down the roller cover with your finger to open the roller cover.

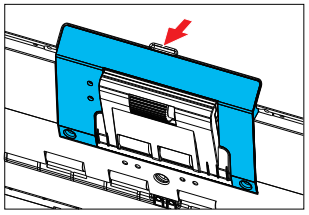
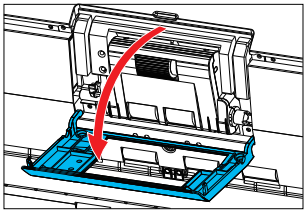

3. Remove the Pickup and Feed roller module.
   a) Pull the lock lever **down** on the shaft to release and loosen the roller module.

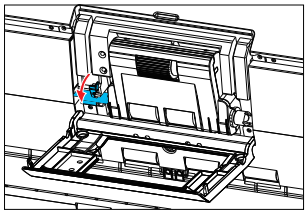
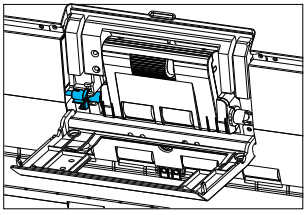

   b) Hold the lock lever and slide the shaft to the left horizontally, then take the roller module out carefully from its compartment.

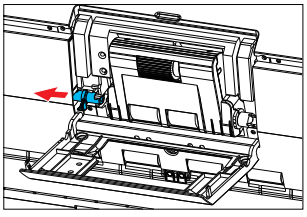
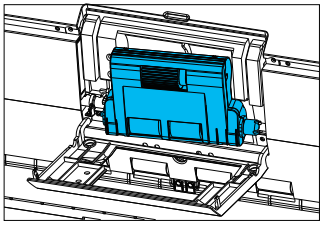

4. Insert the new roller module into its compartment, then reverse the disassembly steps to install it in place. After done, push the roller cover back until it clicks into place.

Note

Please ensure that you fully understand the content of this instruction before proceeding with the roller replacement.

Troubleshooting

The troubleshooting information is intended to help you resolve common issues that may arise while using the scanner. If your issue is addressed here, follow the recommended steps for a possible solution. If the issue still remains, please contact after-sales service for further assistance.

1. **The scanner cannot be switched on**

   Solution:

   Confirm whether the AC power cord is firmly inserted into the power outlet.

2. **Unable to recognize the scanner**

   Solution:

   1) Confirm whether the scanner is connected to the computer correctly through the USB cable.

   2) Confirm whether the scanner is on. If the scanner is not on, see the problem "The scanner cannot be switched on".

   3) The USB port of the computer may not support the scanner. There is no guarantee that all USB ports can be used with this scanner.

   4) Confirm whether the scanner is connected to the computer through the supplied USB cable. There is no guarantee that all available USB cables can be used with this scanner.

   5) If the scanner is connected to the computer via a USB hub, try to remove the hub and connect the scanner directly to the computer.

3. **When starting the DocWizard EX software, a prompt message appears on your screen that reads, "Scanner not found".**

   Solution:

   1) Confirm whether the scanner is properly connected to the computer and powered on, If not, please refer to the previous issues "The scanner cannot be switched on" and "Unable to recognize the scanner" for a solution.

   2) In the open software interface, go to "Scan > Select device source". From the pop-up window, select the correct scanner device to locate the your scanner.

4. **Documents fed skewed (scanned image skewed/paper skewed)**

   Solution:

   1) Adjust a stack of documents by sliding the two Guide Arms toward the edges of the paper to align it with the center of the tray. Ensure the stack is neatly aligned to promote straight feeding.

   2) If the scanner has processed a large number of pages, clean the rollers. If skewing persists, the rollers may need replacement, or other maintenance may be required.

5. **Through lines or stripes appeared on the scanned image**

   Solution:

   Clean the glass surface and the rollers inside of the scanner. If sticky substances such as glue or white-out were discovered, please wipe the areas where the lines appeared carefully with sufficient pressure. If this problem still remains after cleaning, it may be because the glass surface is scratched. Please contact the after-sales service for help.

6. **Pages are missing from the scanning**

   Solution:

   When the "Skip blank pages" feature is enabled, documents with lighter or less black text may be skipped unintentionally. Click the "Scan settings" button and select a different option under "Scan page", such as "Single side" or "Double-sided". If the skipped pages are due to a double-feed, please refer to the problem "Scanned document paper jam (or double sheet feed or failed to pick up paper)"

7. **Scanned document paper jam (or double sheet feed or failed to pick up paper)**

   Solution:

   1) If the rollers are properly installed, clean them when necessary.

   2) When document sheets are stuck together due to static electricity, they may not be scanned. Fan the stack of the documents to separate the pages before loading them into the feed tray.

   3) On the scanner control panel, press the TASK button to switch to Function mode. Then, press the PREV/NEXT button to locate "Separation Mode" on the LCD screen. From there, choose the appropriate paper separation strength (High, Mid, and Weak) based on the actual situation.

      - Set the paper separation strength to "Weak" if frequent paper pickup failures occur.

      - Set the paper separation strength to "High" if double or multiple page pickups happen often.

8. **Insufficient memory, scan stopped**

   Solution:

   If the scanning settings configured occupy a large amount of computer memory, the scan may stop due to insufficient memory. Although this depends on the memory size of computer, repeating the following scanning settings can increase the likelihood of running out of memory.

   - Remove the black frame
   - Set the rotation angle
   - Skip blank pages.
   - If an error message appears during scanning due to insufficient memory, exit the current scan. Adjust the scanning settings by disabling features such as removing the black frame, setting rotation, or skipping blank pages. Then, try scanning again.

9. **Scan Client Program Scan does not work**

   Solution:

   - If Microsoft Visual C++2015-2019 Redistributable (x86) is not installed, please install it.
   - If you are using Windows 7 or lower operating systems, make sure Microsoft Visual C++2015-2019 Redistributable (x86) is installed and enabled.

10. **Scanning speed is too slow**

    Solution:

    1) Close any unnecessary programs running on your computer.
    2) Scanning speed may slow down due to insufficient memory caused by memory-resident programs (e.g., antivirus software). If necessary, close such program to free up memory.
    3) Insufficient hard disk space may prevent the scanner from creating necessary temporary files for scanning. Delete unwanted files from the hard disk to free up more space.
    4) Scanning speed may also slow down if the computer's USB port is not compatible with USB 2.0. Make sure the port is USB 2.0.
    5) If the universal USB cable used is not compatible with USB 2.0, replace it with the supplied compatible cable.
    6) If the scanner is connected to the computer via a USB hub that is not compatible with USB 2.0, remove the hub and connect the scanner directly to the computer.

11. The scan client program displays an "Unknown Error" message, and is unable to perform the scan.

Solution:

Exit the Client Program, turn off the scanner, and restart the scanning. If this problem still remains, please contact the after-sales service for help.

12. The scan client program displays a "Counting Currently" message, and is unable to perform the scan.

Solution:

1) If counting is in progress, wait for it to finish, then exit Count mode before attempting to scan again.

2) If counting is not in progress, check whether the scanner has not exited the previous counting session. If so, exit Count mode before starting a new scan.

Appendix

Product Specifications

Product Type	Scanner
Model Type	S500DC
Optical Resolution	600 dpi
Scanning Sensor	CIS
Light Source	LED (Light Emitting Diode)
Scanning Modes	Color, grayscale, black and white, automatic color identification, multi-stream
Scanning Speed	130 ppm/260 ipm, at 300 dpi, A4 Landscape
Scanning Area (W x L)	Min: 48 mm x 80 mm Max: 305 mm x 1039 mm
Paper Weight (Thickness)	40 ~ 157 g/m² (10.7 ~ 41.8 lb.)
Feeder Capacity	500 pages (A4)
Roller Life (Pickup/Feed/Separation rollers)	450,000 scans (The performance decreases after exceeding 450,000 scans)
Duty Cycle	Unlimited scans daily
Interface	USB 3.0
Driver	TWAIN
Dimensions (L x D x H)	480 mm x 530 mm x 320 mm
Weight	25.8 kg
Voltage	AC 100-240V, 50/60 Hz, 2.1A Max.
Environment	Operating temperature: 0° to 40°C Relative humidity: 20% to 85%
Operating System	Windows 7/ 8/ 10/ 11 (32-bit/64-bit)

NOTE:

1. *Please subject to the official website for product information; no further notice will be given shall there be changes. For more product information, please visit the official website of Microtek.*
2. *To ensure the scanner operates normally, please clean the scanner components regularly. The frequency of cleaning may vary depending on the types of documents scanned.*
3. *The dimensions and weight are approximate values.*

Technical Service

The technical service department of Microtek provides complete technical services. Please have the following information ready before you contact us:

- Serial number of the scanner (located on the rear side or underneath the scanner body).
- Computer hardware information, such as CPU type, RAM size, available hard drive space, graphics card, etc.).
- The name and version of the software application you are using.
- The version of the scanner driver you are using.

Contact us through any of the following methods:

- Online Form: Fill out the online contact form official website of Microtek, and we will get back to you as soon as possible.
- Email: Send your questions, feedback, or inquiries to our official email address.
- Phone: Call our customer service center during our business hours.

We are here to assist you and provide the support you need.