English

Start Here

Installing your Microtek S500DC Scanner

1. Unpack Contents

Unpack your scanner package and check for major components.

1. Scanner
2. Power cord
3. USB cable

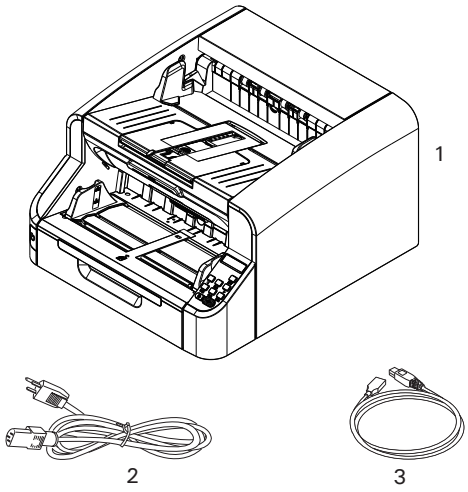

2. Install Software

1. Visit the Microtek website at https://www.microtek.com.
2. Use the search function to find the product “S500DC” and navigate to the “Downloads” page associated with this product.
3. Download the necessary drivers and software marked as “Yes” on the download list, based on your operating system.
4. Once the download is finished, double-click the downloaded file (*.exe) to begin the installation process.
5. After installing all the required drivers and software, restart your computer.

NOTE: The file download process may take some time. The duration may vary based on your internet speed, bandwidth, file size, and other factors. Please be patient during the download. If you encounter any issues or need further assistance, please contact Microtek Customer Service Department.

Copyright © 2024 Microtek International, Inc. https://www.microtek.com
I49-005533 A, 11/2024

MICROTEK

3. Connect Scanner

1. Plug one end of the power cord into the scanner's power connector, and the other end into a wall outlet or another power source.
2. Connect one end of the USB cable to your computer's USB port, and the other end to the USB Type-B port on the scanner.
3. Switch the “I/O” button located on the left side at the back of the scanner to the “I” position to supply power to the scanner.
4. Press and hold the Power button (⏻) on left side of the scanner's front panel for about 3 seconds until the LCD screen activates.

   Once the LCD screen lights up, it will display the ”MICROTEK” logo, followed by ”Ready”, indicating that the scanner is detected by your system and is ready for use.

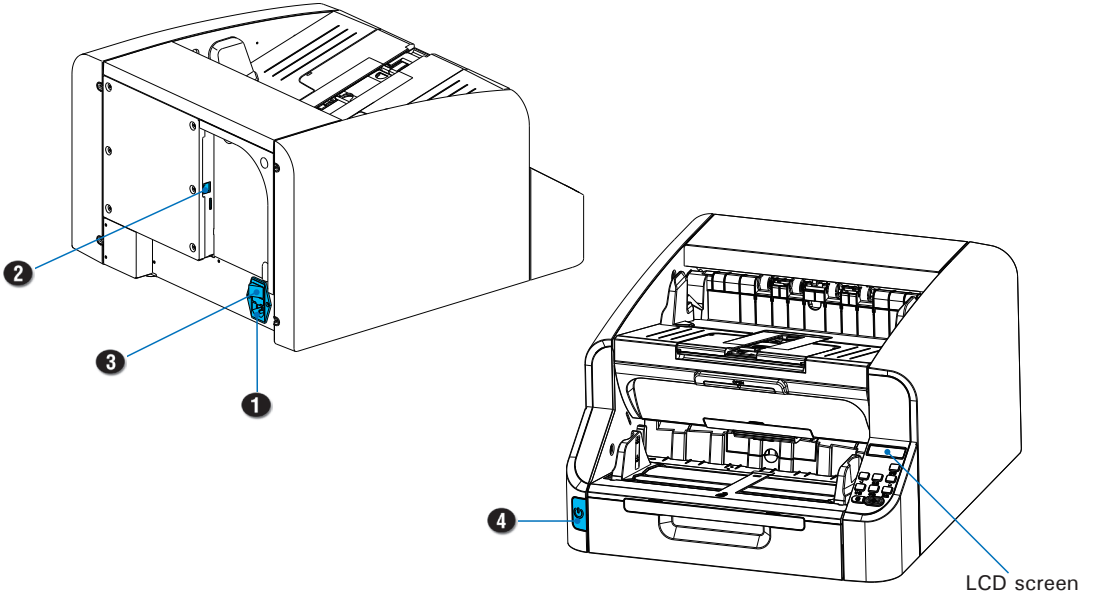

Turning the Scanner On/Off

To turn on the scanner:
Switch the “I/O” button to the “I” position to supply power to the scanner, then press and hold the Power button (⏻) for about 3 seconds until the LCD screen activates, indicating that the scanner is turned on.

To turn off the scanner:
Press and hold the Power button (⏻) until the LCD screen turns off, indicating that the scanner is turned off. You can either leave the scanner in this state or switch the “I/O” button to the “O” position to fully power it off.

Loading a Stack of Documents

1. Fan out the stack of documents to separate the pages, then align the top edges neatly before loading them into the feed tray.

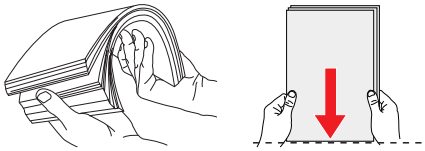

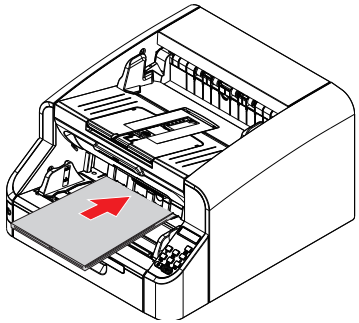

2. Load the stack into the feed tray with the side to be scanned facing up and the top end oriented toward the inside of the scanner.
3. Push the stack into the feeder until the edges touch the end of the tray.
4. If necessary, adjust the stack of document by sliding the two Guide Arms toward the edges of the stack to ensure it is centered in the tray.

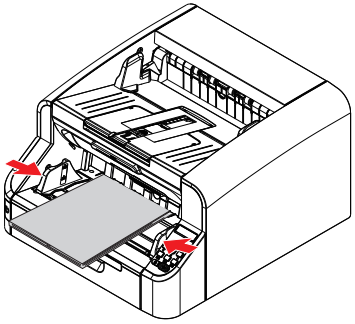

Important: When loading a stack of documents into the feed tray, ensure that the stack does not exceed the maximum height indicated by the marks on the two Guide Arms. Exceeding this limit may cause paper jams during scanning.

Extending the Tray for Longer Documents

To accommodate longer documents or ensure output documents remain neatly stacked in the tray, adjust the feed tray and output tray as needed:

Extend the Feed Tray

Pull out the Feed Tray Extender until it locks into place to support longer documents when loaded.

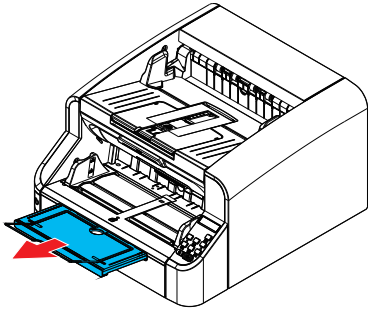

Use the Paper Stopper

Flip up the Paper Stopper and slide it along the slots to the appropriate position to ensure that the output documents are neatly stacked in the tray.

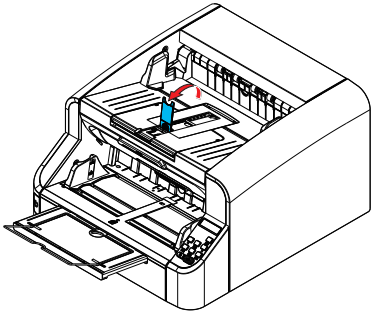

Extend the Output Tray

Flip up the Output Tray Extender until it is fully open and lies flat to support longer documents as they exit.

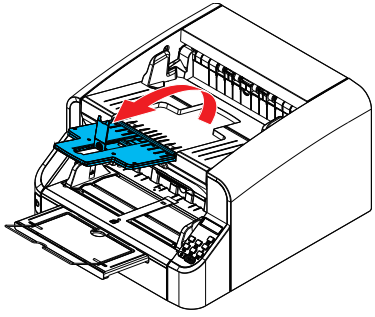

Basic Scanning

1. Load the documents to be scanned into the scanner's feed tray.
2. Launch "**Microtek DocWizard EX**" software by double-clicking its program icon on the desktop.

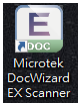

3. Go to "**Scan > Select device source**". Select the scanner driver "**Microtek A3FZ Scanner**" from the window that appears, and then click OK.

   Once the scanner is found, the status bar will show the message "Device Microtek A3FZ Scanner is open", indicating that the scanner is prepared for scanning.

4. Select "**Scan > Scan settings**" and configure the necessary scan settings in the window (TWAIN interface) that appears for your scan job.

   For details on how to configure the scan settings, refer to the online help manual by clicking on the "**Help**" button in the window.

5. Once completed, select "**Scan > Scan**" to start scanning.

   After scanning is complete, the scanned images will be automatically saved to the system's default folder and displayed as thumbnails in the Thumbnail area and Preview area for viewing.

6. Select "**File > Export...**" to save the scanned images with the file properties you specified in the Export dialog box.

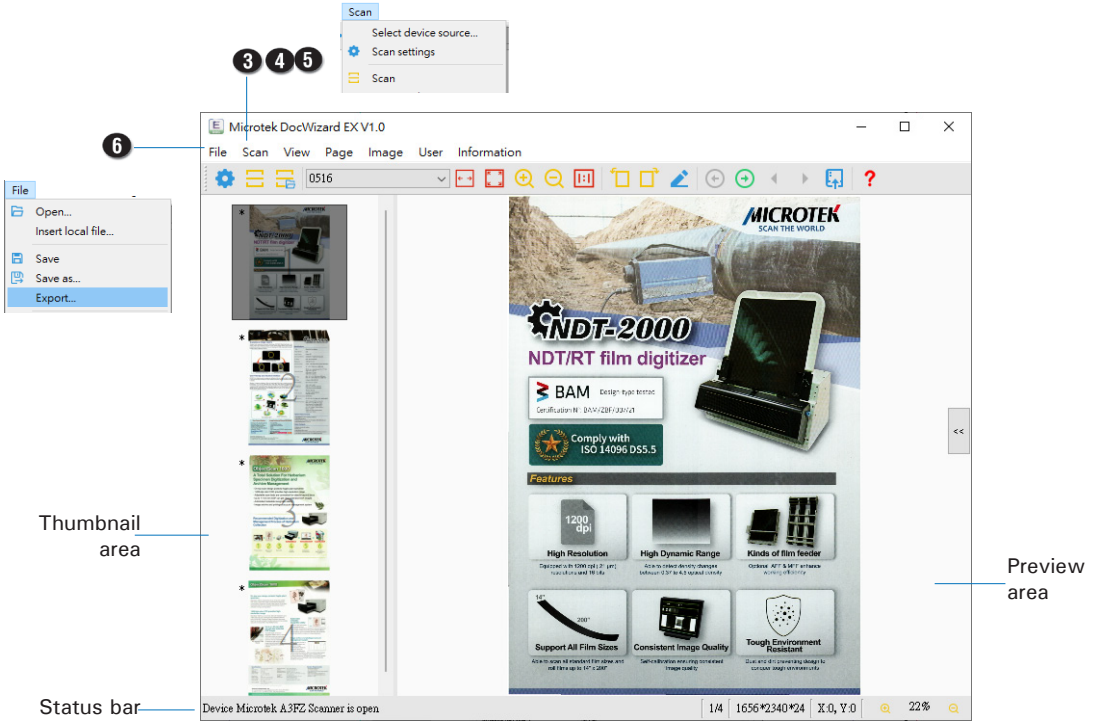

NOTE: For detailed information on using the DocWizard EX scanning software, please refer to the online help manual included with the software.

Fixing Paper Jams

If paper jams or other abnormal situations occur during scanning, please follow these steps to clear paper jams.

Paper Jammed at the Output slot

Gently pull the jammed paper out from the output slot in the direction shown in the picture.

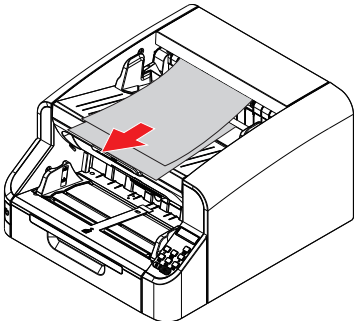

Paper Jammed Inside the Scanner

1. Place your hand under the release handle and press upward in the direction shown in the picture to open the scanner.

   After opening, you will hear three beeps and the LCD screen will display the message "Cover Opened".

2. Lift the upper unit of the scanner to an appropriate position where it remains securely open.

3. Remove any jammed paper from the feed path.

4. Lower the upper unit back until it clicks into place.

   At this point, the LCD screen will display "Ready" message to indicate that the scanner is prepared for use.

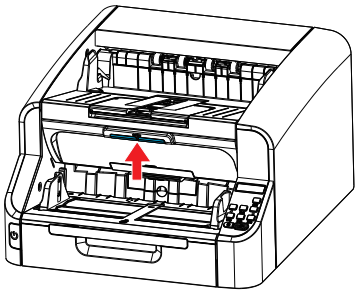

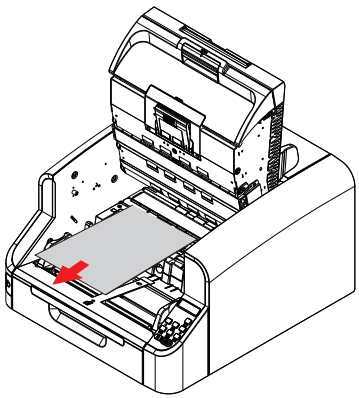

NOTE:

- *Be careful not to trap your hands or fingers when lifting or lowering the upper unit of the scanner.*
- *Do not forcefully remove jammed paper from the feed tray while the upper unit is closed. Doing so may damage the rollers and result in improper scanner functionality.*

Scanner Operation Panel

The scanner operation panel is located on the front right side of the scanner, includes nine physical buttons and an LCD screen. Through this panel, you can directly configure the settings for scanner's hardware functions without having to connect to a computer. These functions include counting pages, checking scan and roller counts, setting the idle time before sleep mode activates, and more, providing you with a convenient and practical hardware interface.

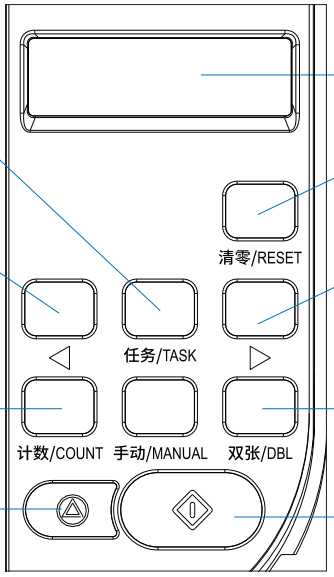

TASK:
Press to enter Function mode from Ready mode. It also serves as a confirmation button for a selection.

PREV (◁):
Press to go back to the previous option.

COUNT:
Press to enter Count mode; press again to return to Ready mode.

STOP:
Press to pause the ongoing page counting or scanning operation.

LCD panel:
Displays information relevant to the current operation mode or task in progress, as well as any error messages that may occur.

RESET:
Press to reset the page or scan count to zero.

NEXT (▷):
Press to move to the next option.

DBL:
Press to enable/disable the scanner's ultrasonic double sheet detection function.

START:
Press to begin the page counting process.

The scanner operates in three main modes: Ready, Function, and Count. For detailed instructions on how to access and use each mode, please refer to the scanner's user manual, which is available on the Microtek website.

Troubleshooting

If you encounter issues while using the scanner, please first refer to the "Troubleshooting" section of the scanner's user manual available on the Microtek website for common problems, and follow the recommended steps for a possible solution. If the issue still remains, please contact the Microtek Customer Service Departement for further assistance.

Care and Cleaning

To ensure optimal performance from your scanner, it is important to regularly clean several critical components of the scanner, including sensors, rollers, and glass surfaces. For detailed cleaning instructions, please refer to the scanner's user manual available on the Microtek website.

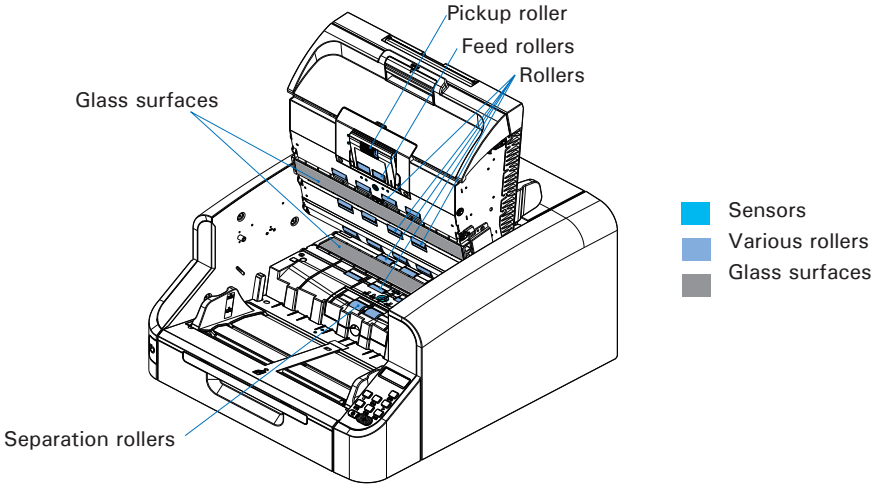

Replacing the Rollers

Over time, the rollers in your scanner may wear out, leading to issues such as paper jams and feed errors. To resolve these problems, inspect the rollers and replace them if necessary. For detailed replacement instructions, please refer to the scanner's user manual available on the Microtek website.

Lower inside of the scanner

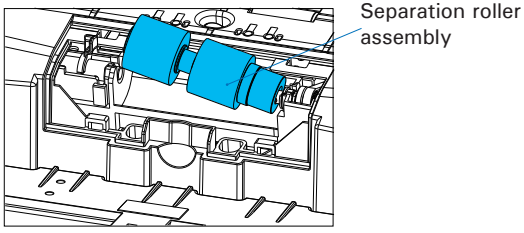

Upper inside of the scanner

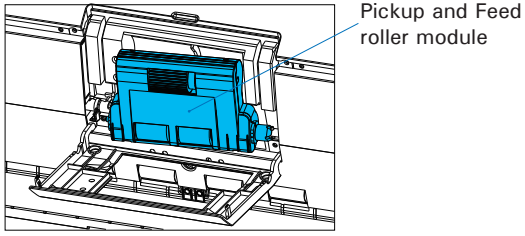

IMPORTANT:

- *After the replace roller prompt appears, please purchase a replacement roller kit and replace the roller by following the related steps in the removal and reinstallation steps.*
- *When the roller shows signs of wear, the chance of paper jam and paper feed errors occurring will increase. If this type of situation occurs, please replace the roller regardless of the page count.*
- *Make sure to reset the roller count after replacing the roller.*

Do You Need Assistance?

Manuals

If you need additional product information or guidance, we provide electronic manuals for the following:

1. S500DC scanner user manual
2. Microtek DocWizard EX software manual

To access these manuals, visit the Microtek website at www.microtek.com. Search for the product keyword to find the product's "Downloads" page. Then, download the manual you wish to view. The software manual is also accessible through the software's online help/manual feature.

Missing Items

If your package is missing items, please contact the Microtek Customer Service Department.

Drivers and Software Updates

If the installed drivers or software are not working properly on your product or operating system after installing the software package, please go to the Microtek website at www.microtek.com. Search for the product keyword to find the product's "Downloads" page. Then, download and install any necessary updates needed. If you encounter any issues or need further assistance, please contact Microtek Customer Service Department.

For more information about Microtek products, please visit our website at www.microtek.com.

©2024 Microtek. Microtek, ScanMaker, ArtixScan, ScanWizard and ColoRescue are trademarks or registered trademarks of Microtek International, Inc. All other trademarks or registered trademarks are the property of their respective holders. Specifications, software and hardware bundles are subject to change without notice. Delivery of technical support services subject to change without notice. Not responsible for typographical errors.