MICROTEK

Quick Start Guide

1. Unpacking Package Contents

Unpack your document camera package and check for major components.

1) Document camera
2) Black Pad
3) USB cable
4) Quick Start Guide

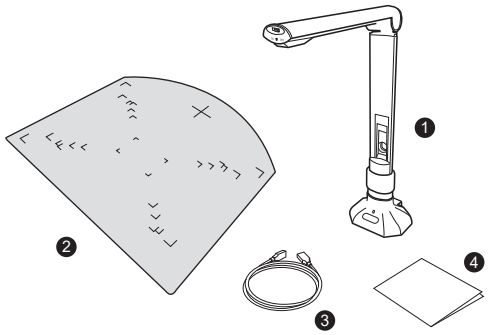

2. Installing the Software

1) Go to the Microtek website at https://www.microtek.com.
2) Use the search function to locate your product (e.g., H-Screen 912L) and navigate to the “Downloads” page associated with this product.
3) Download the required driver marked as “Yes” on the download list, based on your operating system.
4) After the download is complete, double-click the downloaded file (*.exe) to begin the installation process.

   Once the installation is finished, you’ll notice the program icon appearing on the desktop.

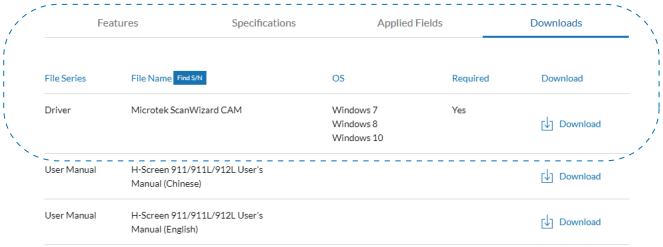

3. Connecting the Document Camera

1) Connect one end of the USB cable to the USB port on the document camera.
2) Connect the other end of the USB cable to the USB port on your computer.

   When done, the power indicator light on the front of the document camera base will light up in blue, and the system will automatically detect the new device.

   Once the system detects the document camera, you can prepare to start capturing images.

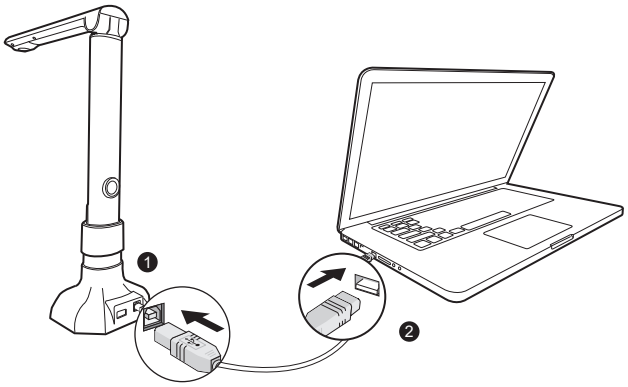

4. Positioning Documents

1) Place the Black Pad on a flat and stable surface. Then, position the document camera on the Black Pad and align it with the position markers, as shown in the picture.
2) Place the document to be captured facing up on the Black Pad.

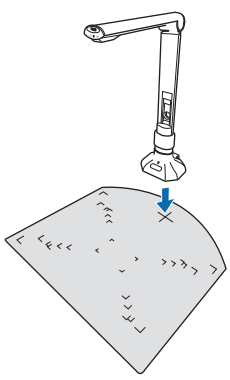

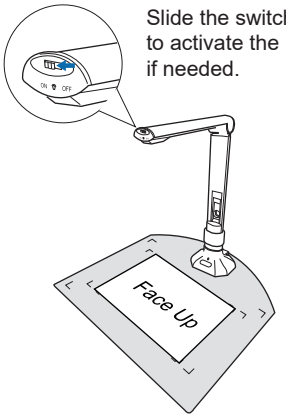

Slide the switch to “ON” to activate the Fill Lights if needed.

5. Launching Software

1) Double-click the “Microtek ScanWizard CAM” shortcut icon on the desktop to activate the software.
2) If the document camera is successfully connected, a real-time preview video feed from the camera should be visible. You can now start capturing images.



For more details, please refer to the manual available on the "Downloads" page for the product on the Microtek website.

I49-005514, A